REV.	ECN NO.	DESCRIPTION	DRAW	CHECK	APPD.	DATE
A0	------	NEW DRAWING	Tomath	Linson	Rambo	2024.09.19

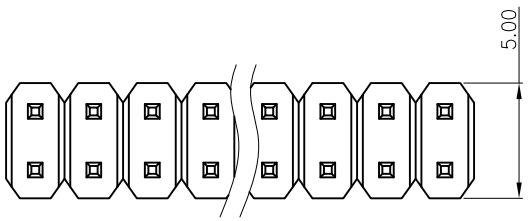

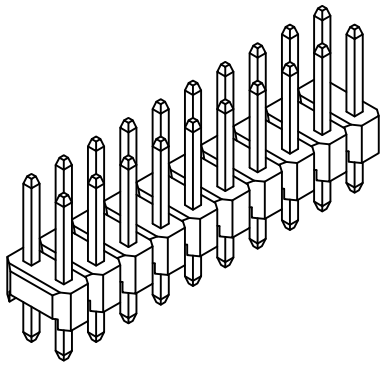

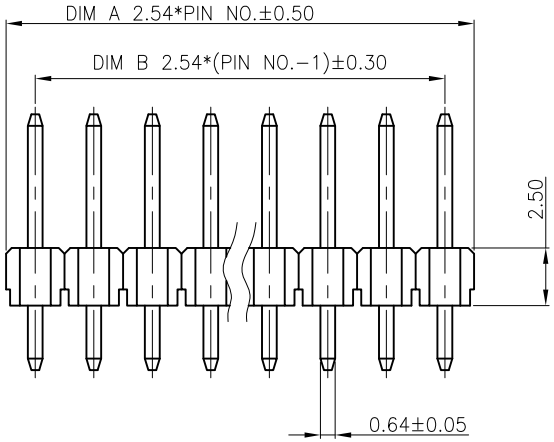

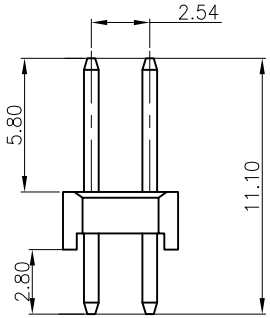

SPECIFCATIONS:
1.0 Electrical Characteristics:
1.1 Contact current Rating:
3 Amperes per pin
1.2 Dielectric Withstanding Voltage:AC 500V(RMS)
1.3 Insulation resistance:1000Megohms Minimum.
1.4 Contact Resistance:
Initial:30mΩ Max for mated connector
final(after stress)50mΩMax
2.0 Material:
2.1 Housing: Thermoplastic 94V−0
Colour:Blue/Yellow/Red/White/Black
2.2 Contact: Copper alloy
3.0 PLATING:
Contac : Gold flash
Nickel underplating overall
4.0 Operating Temperature:−20°to+85°

料号备注

CE	2	M	XX	03	D	XX	P	XX	X	X

- 02=2x1Pin / 80=2x40Pin
- 17=镀全金 G/F / 11=镀全锡
- 04=PA6T 蓝色 / 03=PA6T 黄色 / 02=PA6T 红色 / 01=PA6T 白色 / 00=PA6T 黑色
- W=RoHS2.0+HF / R=RoHS2.0标准
- B=盐雾24H

No.of contacts	DIM A	DIM B	No.of contacts	DIM A	DIM B
2X1	2.54	0.00	2X21	53.34	50.80
2X2	5.08	2.54	2X22	55.88	53.34
2X3	7.62	5.08	2X23	58.42	55.88
2X4	10.16	7.62	2X24	60.96	58.42
2X5	12.70	10.16	2X25	63.50	60.96
2X6	15.24	12.70	2X26	66.04	63.50
2X7	17.78	15.24	2X27	68.58	66.04
2X8	20.32	17.78	2X28	71.12	68.58
2X9	22.86	20.32	2X29	73.66	71.12
2X10	25.40	22.86	2X30	76.20	73.66
2X11	27.94	25.40	2X31	78.74	76.20
2X12	30.48	27.94	2X32	81.28	78.74
2X13	33.02	30.48	2X33	83.82	81.28
2X14	35.56	33.02	2X34	86.36	83.82
2X15	38.10	35.56	2X35	88.90	86.36
2X16	40.64	38.10	2X36	91.44	88.90
2X17	43.18	40.64	2X37	93.98	91.44
2X18	45.72	43.18	2X38	96.52	93.98
2X19	48.26	45.72	2X39	99.06	96.52
2X20	50.80	48.26	2X40	101.60	99.06

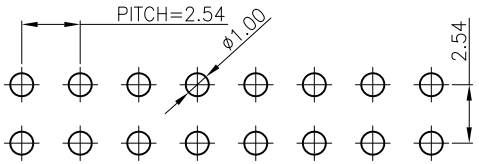

RECOMMENDED P.C.B LAYOUT

东莞市兴科杰鑫电子有限公司
Dong Guan XingKeJieXin Electronics Co.,Ltd

UNLESS OTHERWISE SPECIFIED
TOLERANCES

	METRIC
X. +/−	0.30
.X +/−	0.20
.XX +/−	0.10
FRACTIONS +/−	
ANGLES +/−	2.00°

DIMENSIONS (METRIC) (MM)

APPROVAL		日期
制图	Tomath	2024.09.19
审核	Linson	2024.09.19
核准	Rambo	2024.09.19

文件位置

ANGLE OF PROJECTION

品名规格	排针 2.54 PITCH（双排）		
料号	SEE TABLE		
字张 A4	工程图号: DWG-CEOM-003		版本. A0
比例 1 : 1	状态码 A	页数 1 OF 1	